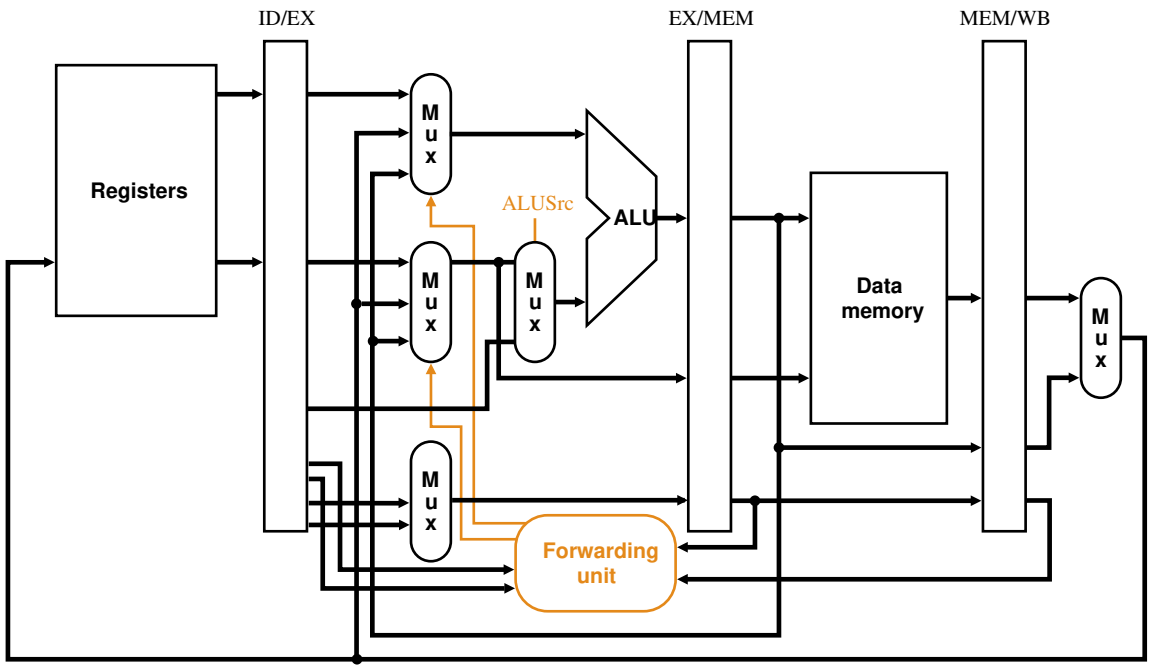
ID/EX
EX/MEM
MEM/WB
Registers
M
u
x
M
u
x
M
u
x
ALUSrc
M
u
x
ALU
Data
memory
M
u
x
Forwarding
unit