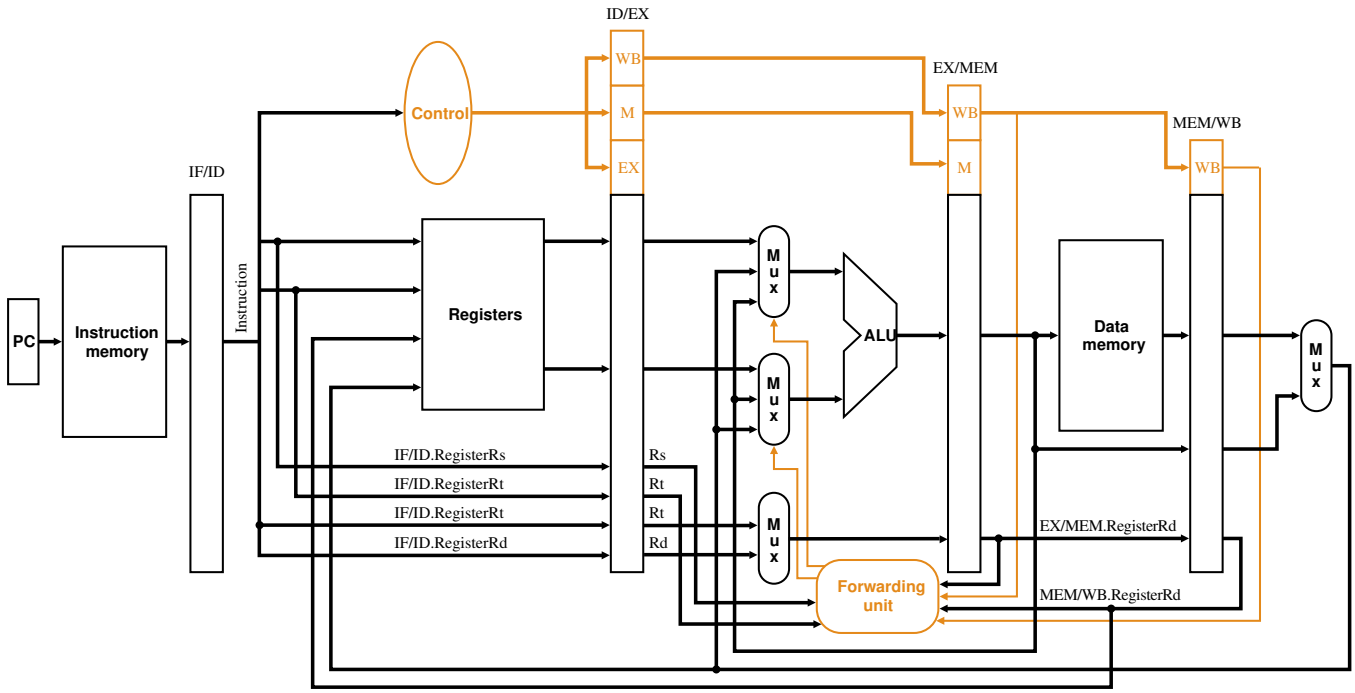
ID/EX
EX/MEM
MEM/WB
IF/ID
Control
WB
M
EX
WB
M
WB
PC
Instruction memory
Instruction
Registers
Mux
Mux
Mux
ALU
Data memory
Mux
IF/ID.RegisterRs
IF/ID.RegisterRt
IF/ID.RegisterRt
IF/ID.RegisterRd
Rs
Rt
Rt
Rd
EX/MEM.RegisterRd
Forwarding unit
MEM/WB.RegisterRd