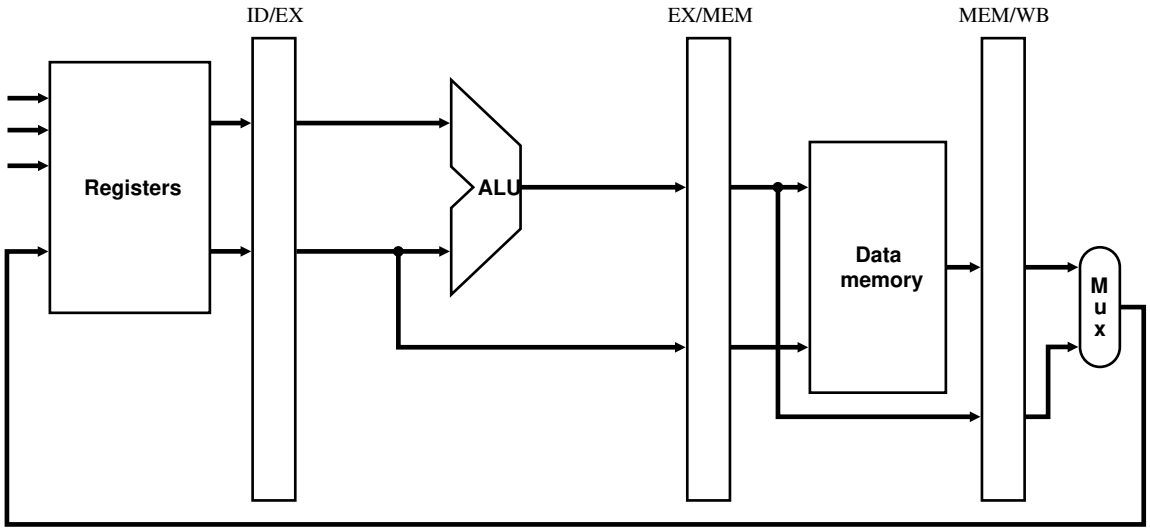

a. No forwarding

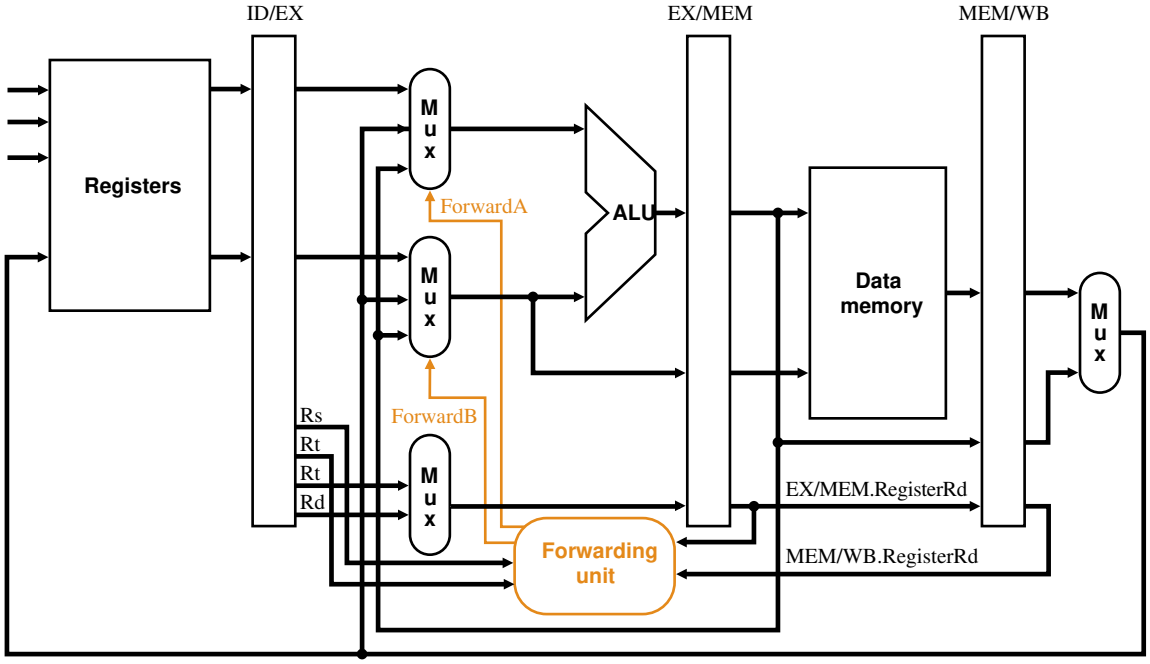

b. With forwarding