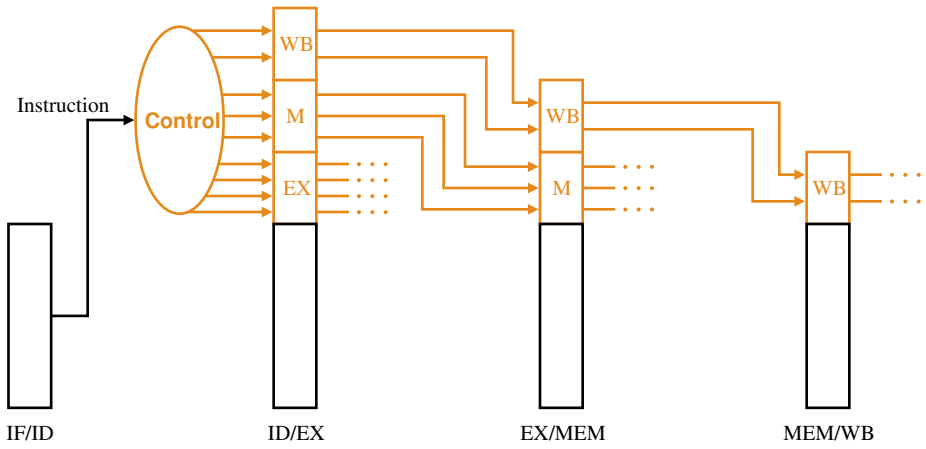
Instruction
Control
WB
M
EX
WB
M
WB
IF/ID
ID/EX
EX/MEM
MEM/WB