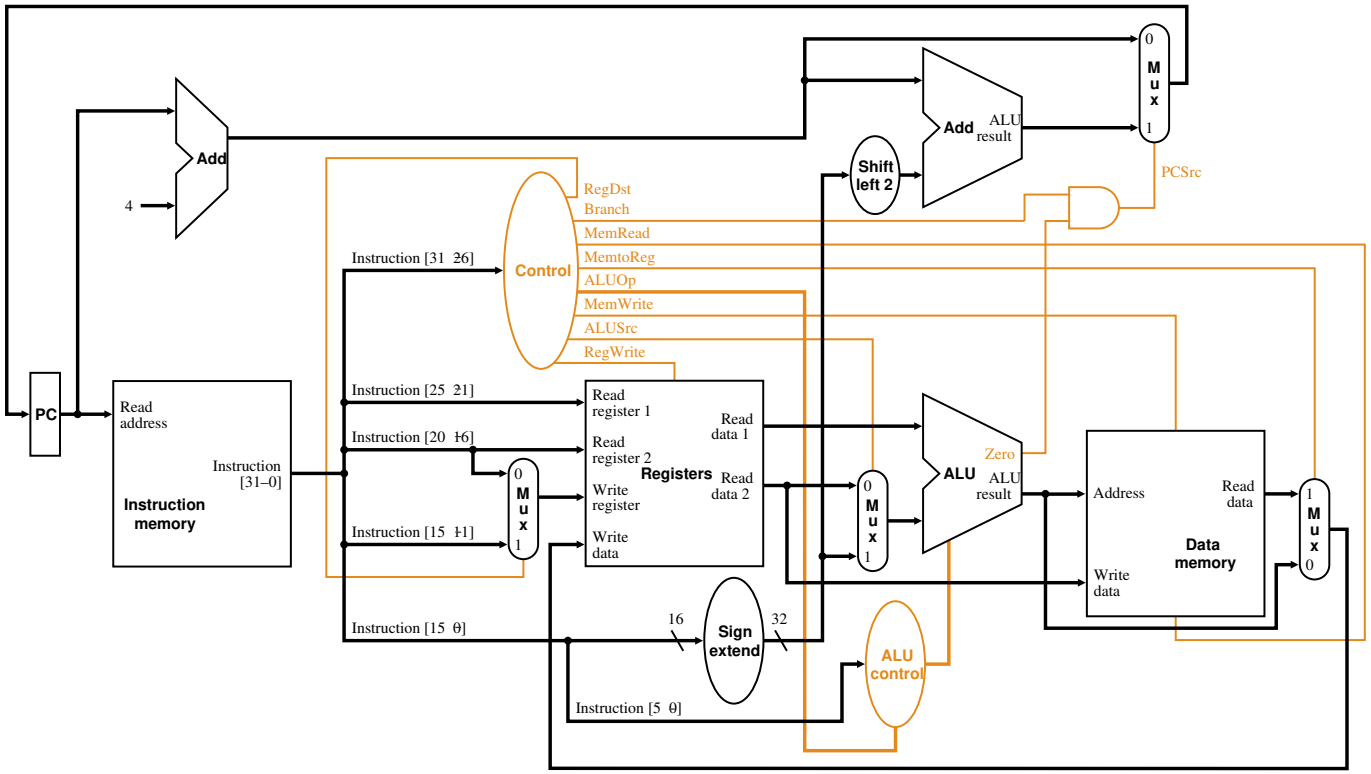
PC
Add
4
Read address
Instruction [31–0]
Instruction memory
Instruction [31–26]
Control
RegDst
Branch
MemRead
MemtoReg
ALUOp
MemWrite
ALUSrc
RegWrite
Instruction [25–21]
Instruction [20–16]
Instruction [15–11]
Instruction [15–0]
Instruction [5–0]
M u x
Read register 1
Read register 2
Registers
Write register
Write data
Read data 1
Read data 2
16
Sign extend
32
Shift left 2
Add
ALU result
ALU
Zero
ALU control
Address
Read data
Data memory
Write data
PCSrc