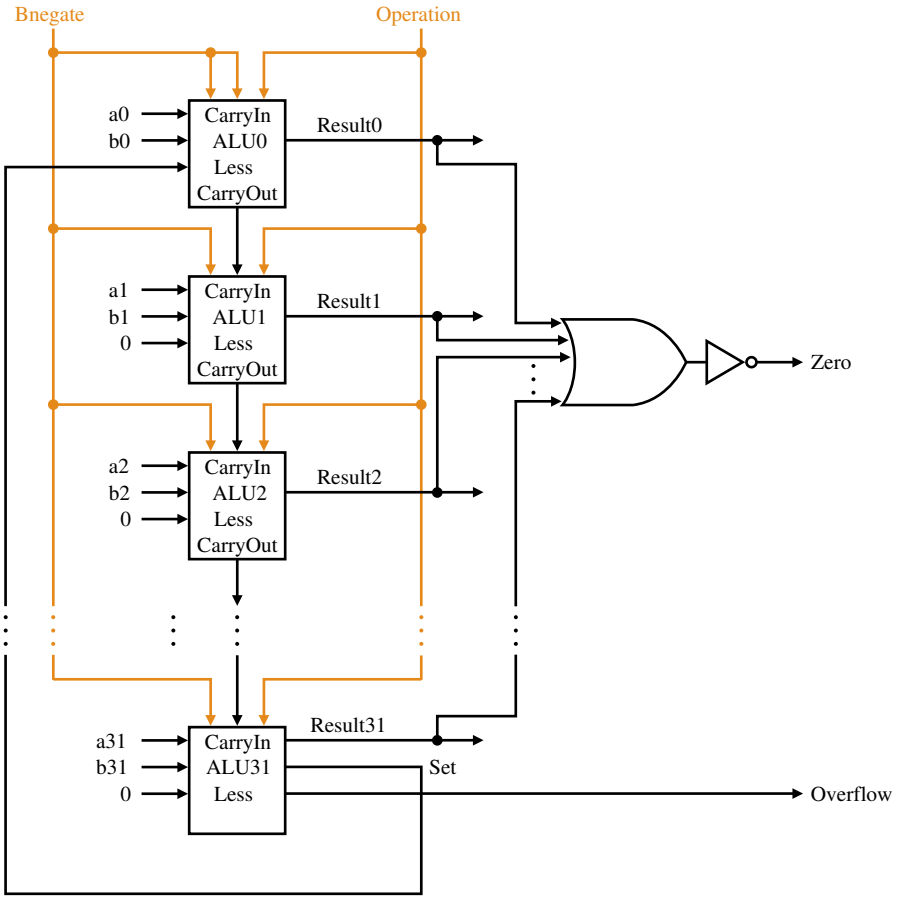
Bnegate
Operation
a0
b0
CarryIn
ALU0
Less
CarryOut
Result0
a1
b1
0
CarryIn
ALU1
Less
CarryOut
Result1
a2
b2
0
CarryIn
ALU2
Less
CarryOut
Result2
a31
b31
0
CarryIn
ALU31
Less
Result31
Set
Overflow
Zero