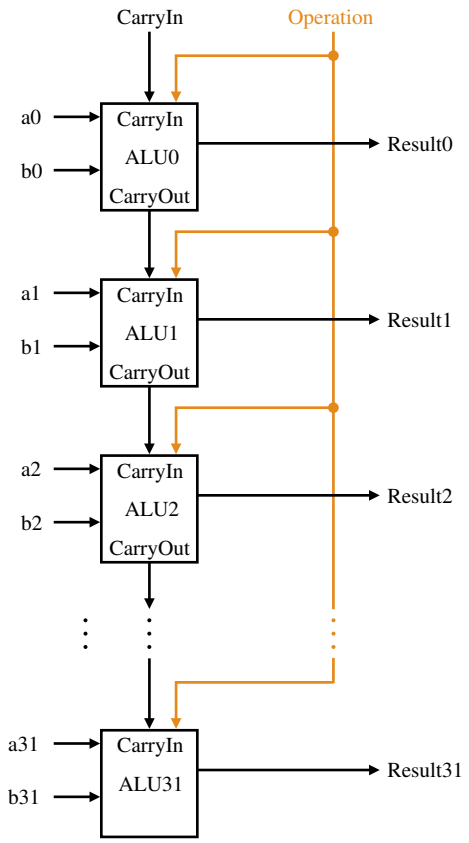
CarryIn
Operation
a0
b0
CarryIn
ALU0
CarryOut
Result0
a1
b1
CarryIn
ALU1
CarryOut
Result1
a2
b2
CarryIn
ALU2
CarryOut
Result2
a31
b31
CarryIn
ALU31
Result31