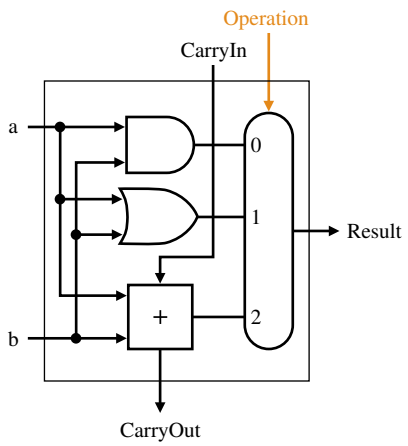
Operation
CarryIn
a
b
0
1
2
+
Result
CarryOut