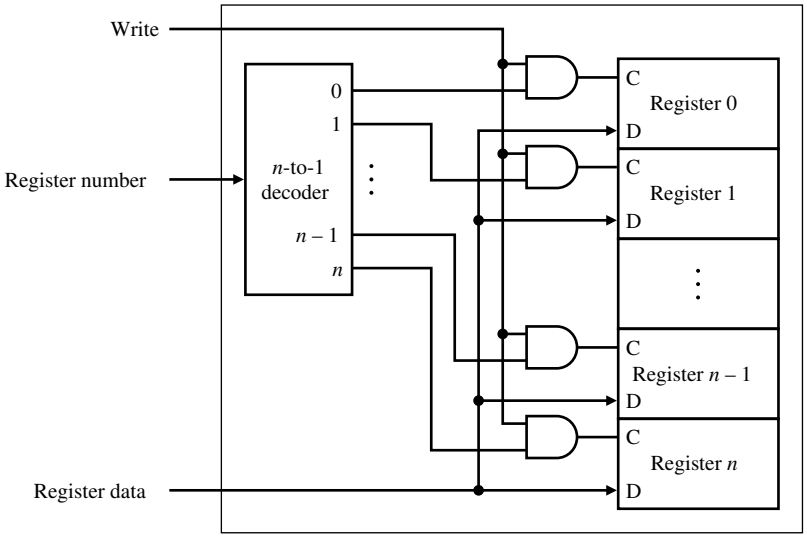
Write
Register number
Register data
0
1
n-to-1
decoder
n – 1
n
C
Register 0
D
C
Register 1
D
C
Register n – 1
D
C
Register n
D