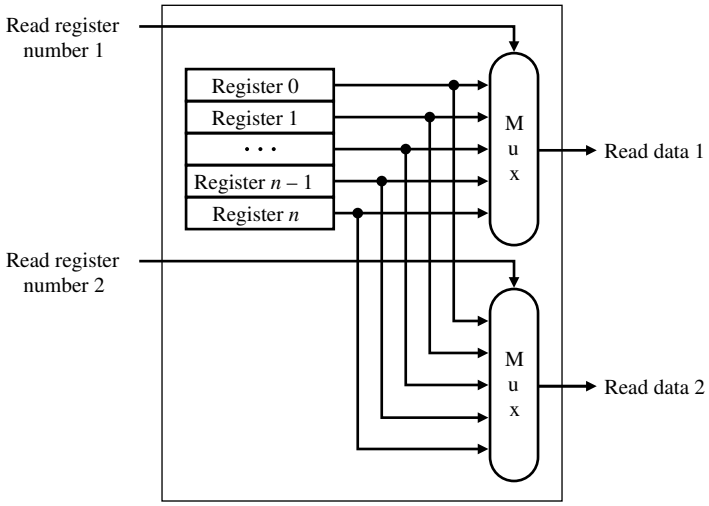
Read register number 1
Register 0
Register 1
. . .
Register n – 1
Register n
M u x
Read data 1
Read register number 2
M u x
Read data 2